Proceedings of the XVII ECSMGE-2019
Geotechnical Engineering foundation of the future
ISBN 978-9935-9436-1-3
© The authors and IGS: All rights reserved, 2019
doi: 10.32075/17ECSMGE-2019-1040

XVII European Conference
ECSMGE 2019
Reykjavik
on Soil Mechanics
and Geotechnical Engineering

The experience of determining the long-term settlements of increased liability buildings and structures

L'expérience de la détermination des règlements à long terme de bâtiments et de structures à responsabilité accrue

A. Z. Ter-Martirosyan
NRU MGSU, Moscow, Russia

Z. G. Ter-Martirosyan
NRU MGSU, Moscow, Russia

V. V. Sidorov
NRU MGSU, Moscow, Russia

ABSTRACT: The article deals with the calculation cases of the determination of long-term settlements of buildings and structures, including structures of underground transport objects and nuclear power facilities. The analysis of modern methods for determining the parameters of models that take creep into account is carried out, as well as the author's results of laboratory tests are presented. A comparative analysis of various analytical methods for determining the total settlement of buildings, as well as its components by various methods, including the finite element method, is presented. The comparative analysis is based on determination of settlements according to US and Russian standards, including the calculation of immediate settlement, settlement due to consolidation of the base, as well as long creep strains. According to US standards, the methods of Janbu, Perloff, Kay and Cavagnaro were considered. Differences in the determination of the compressible thickness of the base are considered, which are decisive when finding the value of the settlement. In turn, the value of the compressible layer depends on the distribution of compression stresses in the soil of the base, which differs in different techniques. The article describes the method of accounting for the large-scale factor in terms of foundations made for responsible and heavily loaded structures, as a result of which it is possible to determine the correction coefficients for the calculated values of the base deformation modulus within the compressible strata. Features of calculation of influence of parts of responsible constructions on each other and surrounding infrastructure are considered.

RÉSUMÉ: Cet article traite des cas de calcul de la détermination de colonies à long terme de bâtiments et de structures, y compris des structures d'objets de transport souterrains et des installations d'énergie nucléaire. L'analyse des méthodes modernes de détermination des paramètres des modèles prenant en compte le fluage est effectuée, ainsi que les résultats des tests de laboratoire réalisés par l'auteur. Une analyse comparative de diverses méthodes analytiques permettant de déterminer le tassement total des bâtiments, ainsi que ses composants, à l'aide de diverses méthodes, y compris la méthode des éléments finis, est présentée. L'analyse comparative est basée sur la détermination des règlements selon les normes américaines et russes, y compris le calcul du règlement immédiat, le règlement en raison de la consolidation de la base, ainsi que de longues déformations de fluage. Selon les normes américaines, les méthodes de Janbu, Perloff, Kay et Cavagnaro ont été considérées. Les

différences dans la détermination de l'épaisseur compressible de la base sont prises en compte, lesquelles sont décisives pour déterminer la valeur du tassement. À son tour, la valeur de la couche compressible dépend de la répartition des contraintes de compression dans le sol de la base, qui diffère selon les techniques. L'article décrit la méthode de comptabilisation du facteur de grande échelle en termes de fondations pour des structures responsables et fortement chargées, ce qui permet de déterminer les coefficients de correction pour les valeurs calculées du module de déformation de base dans le domaine compressible. couches. Les caractéristiques de calcul d'influence de parties de constructions responsables les unes sur les autres et sur l'infrastructure environnante sont prises en compte.

Keywords: settlement; creep; consolidation; approximation; deformation modulus

1 INTRODUCTION

At present, the calculation of the foundation of buildings and structures is an integral part of any project and has been carried out for many decades. However, even such a weighty experience does not allow engineers in each case to obtain reliable results of the calculation. This is primarily due to the complexity of the soil behavior - a manifestation of the processes of primary (filtration) and secondary consolidation (creep), as well as with features of the structure of specific regional soils (manifestation of subsidence, swelling, heaving, etc.). But even with modern methods for determining the stress-strain state of the base, taking into account the manifestation of all these processes, there are many questions to the calculation of precipitation when they are performed according to the standards of various countries and scientific schools. Many countries have extensive experience in monitoring the foundation of the erected structures, comparing the predicted and actual values of settlements, identifying deviations in forecasts for each group of similar cases. However, the methods for analytical determination of precipitation in the regulatory documents of different countries differ, although the initial theories and assumptions adopted for the compilation of the methodology are often the same. In this paper, such a comparison is made for one of the heavily loaded buildings of a nuclear power facility, which was calculated according to the norms of Russia and the United States. Examples are also given of determining the creep parameters of the base soils and the very precipitation due to creep, since this component is most dangerous due to its occurrence in a very long period of time.

2 SETTLEMENT ANALYSIS

It is known, that the settlement of the base subjected to static loads is defined as the sum of three components - immediate settlement ρ_i, settlement occurring as a result of the primary consolidation process ρ_c, and settlement associated with the process of the secondary consolidation (creep) - ρ_s.

In US norms (EM 1110-1-1904), various approximations for cohesive and non-cohesive soils are used to determine immediate settlement. For cohesionless soils, solutions of Alpan, Schulze, and Sheriff, modified by Terzagi and Peck, Schmertmann, Burland and Barbidge and approximation using dilatometric data are distinguished. Static loads cause instantaneous and long-term settlements in cohesive compressible soil. Stresses in the ground caused by applied loads are compared with the maximum historical pressure. If the stress in the soil exceeds the historical pressure, then the settlement of the primary and secondary consolidation can be

significant and should be determined by appropriate methods. To determine the immediate settlement of clayey soils, the modified Janbu approximation, the Perloff approximation, the Kay and Kavagnaro approximation, and the elastic modulus approximation with a linear increase in the Gibson model are used. For the problem under consideration, the Janbu approximation is applicable, taking the bedding of soils under the foundation footing as a single layer with weighted average deformation characteristics, the Kay and Kawagnaro approximation for a soil massif with different deformation modules of its layers and the Perloff approximation.

2.1 Object of calculation

The building of nuclear power plant is supposed to be constructed using the form of a solid reinforced concrete monolithic slab with a flat base of 80.0x76.8 m.

The weight of the block under consideration is $3.665*10^6$ kN. The weight of the building, taking into account the backfill, is $3.745*10^6$ kN. The average pressure beneath the foundation slab is 610 kPa.

The basic diagram of the building foundation with the eccentricity of the load relative to the center of gravity is shown in Figure 1.

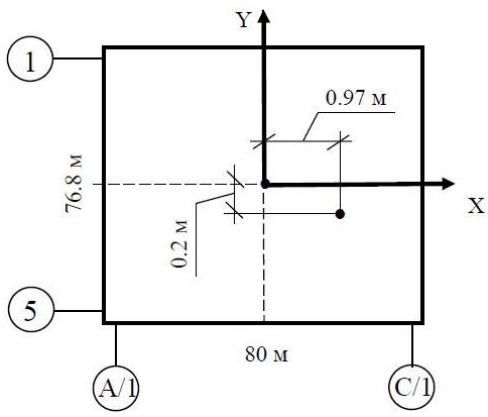

Figure 1. Dimensions and location of the eccentricity of the foundation slab of the building

Engineering and geological conditions of the construction site are presented in the form of a report on engineering-geological surveys and the corresponding engineering geological sections.

As an opening, on which engineering-geological conditions are accepted for analysis, borehole № 172 (located in the reactor compartment footprint) is taken with a depth of 120 m.

The sequence of soils lying beneath the base of the foundations is as follows: layer - 5 – h=3.3 m, E=22 MPa; layer-7 – h=1.7 m, E=36 MPa; layer-8 – h=3.3 m, E=28 MPa; layer-9 – h=5.3 m, E=23 MPa; layer-10 – h=3.5 m, E=13 MPa; layer-9 – h=2.3 m, E=23 MPa; layer-11 – h=0.7 m, E=38 MPa; layer-9 – h=0.7 m, E=23 MPa; layer-11 – h=1.2 m, E=38 MPa; layer-9 – h=1.6 m, E=23 MPa; layer-12 – h=17.2 m, E=40 MPa; layer-13 – h=10.8 m, E=46 MPa.

To determine the time of consolidation, the sample consolidation test data of the special geological company are applied. The results of tests for the examined soils are processed with the purpose of obtaining parameters to analyze creep.

Examples of the test results are shown in Figure 2.

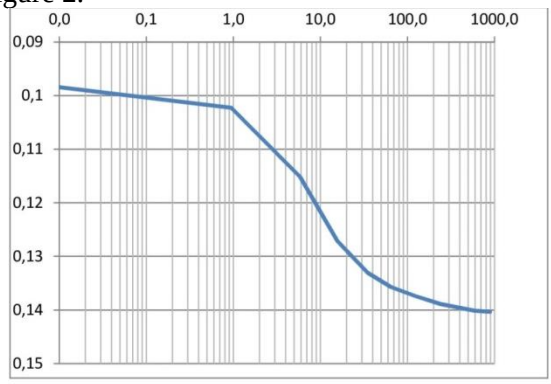

Figure 2. Consolidation test curve for soil sample from depth of 59 m

2.2 Immediate setlement

Starting the calculation, it is necessary first of all to determine the thickness of the compressible strata. To this end, American standards use the method of compressive stress distribution over a

depth of 2: 1. In this case, the stress distribution is described at each depth from the base of the foundation as an expression:

$$\sigma_z = \frac{Q}{(B+z)\cdot(L+z)}, \quad (1)$$

where Q – applied weight of the building;
B,L – dimensions of the foundation slab;
z – depth under the foundation.

In accordance with this equation, the values of compressive stresses at each depth change of the soil layers were determined. We also plotted the natural pressure and determined the depth at which the compressive additional pressure from the weight of the building was 0.2 of the natural pressure, which was the criterion for limiting the compressible thickness.

In accordance with the stress distribution obtained, the depth of the compressible strata was 55.9 m.

According with Janbu Approximation the immediate settlement in accordance with this approximation can be determined by the following formula:

$$\rho_i = \mu_0 \cdot \mu_1 \cdot \frac{q \cdot B}{E_s^*}, \quad (2)$$

where

μ_0 is the influence factor for the depth D, it is determined in accordance with the curves in norms; μ_1 is the foundation shape influence factor, it is determined in accordance with the normative curves; E_s^* is equivalent Young's modulus for soil, kPa.

$E_s^* = 34.96$ MPa, $\rho_i = 30.82$ cm.

Key and Cavagnaro approximation

The solution of these authors is described by the same equation as the Kerabek and Reynolds approximation, but differs in that different coefficients I are adopted. The calculation formula is as follows:

$$S_i = \frac{q \cdot h_i \cdot I_{ci}}{E_{si}}, \quad (3)$$

where q is the pressure under foundation bottom, kPa;

h_i is the layer thickness;

I_{ci} is the influence factor calculated for the middle part of the layer;

E_{si} is modulus of deformation of the layer under consideration in the stratum.

The elastic modulus of deformation is taken for each layer under consideration in the base with thickness h_i. According to the curves presented in norms, the influence factor for the central point of the foundation is determined depending on the soil Poisson's ratio v_s. The ultimate settlement of the foundation by that method was 64.21 cm.

Perloff Approximation is executed by the following formula:

$$\rho_i = I \cdot q \cdot B \cdot \left[\frac{1-v_s^2}{E_s}\right], \quad (4)$$

where I is the influence factor for infinitely deep and homogeneous soil, it is defined from normative tables (for limited compressible stratum); E_s is the modulus of soil elasticity;

$\propto$ is the correction factor used in case where the soil beneath the foundation base is stiffer than underlying soil (in our case it is not taken into account, as the modulus of elasticity as a whole grows with depth).

According to this method, the settlement was 70.9 cm.

It should be noted that in the presented calculations the Young's modulus is applied, that is, the elastic modulus of deformation of the soil material, which can be determined from the results of various tests (Appendix D). Since the soil operates linearly (the strain depends on stresses) only for sufficiently small deformations, it is recommended to determine such a modulus on the initial segment of the graph of traditional triaxial tests, drawing a tangent to this graph from

the zero point of vertical deformations. However, the deformation modules used for the calculations above are determined from the slope of the secant indicating the range of soil operation at a certain depth (from its natural state to applying additional pressure from the object under construction). Therefore, the obtained settlements already include the second part of the settlement, which is described in the document - settlement due to the primary consolidation.

2.3 Secondary compression

Secondary compression and creep take place in many geotechnical problems. Secondary compression may contribute significantly to settlement where soft soil exists, particularly soft clay, silt, and soil containing organic matter or where a deep compressible stratum is subject to small pressure increments relative to the magnitude of the effective consolidation pressure.

The decrease in void ratio from secondary compression is as follows:

$$\Delta e_{st} = c_\alpha \cdot log \frac{t}{t_{100}}, \quad (5)$$

where c_α is coefficient of the secondary compression (consolidation); t is consolidation time (it corresponds to the structure operation time); t_{100} is time corresponding to 100 percent of primary consolidation (filtration consolidation).

Secondary compression settlement is calculated from the following equation:

$$\rho_s = \frac{\Delta e_{st}}{1+e_0} \cdot h \quad (6)$$

For the calculated example of the base of the building there are numerous soil tests from depths of 6.8-48.2 m of various boreholes performed in consolidation mode, using compression devices.

As a result, the consolidation ratios in the range of 0.001-0.002 are obtained. The consolidation time varies from 8 to 295 minutes. The building operation time is 80 years (29219 days). For the entire taken compressed width (H_c = 55.9 m), the obtained indices for calculating the creep of the base are averaged. The following amounts are obtained of the creep settlement for layers.

Total settlement of the soil base caused by creep was 32.2 cm.

2.4 Calculation by Russian norms and compirison between results

According to the results of particular calculations, the total settlement taking into account the immediate component, primary consolidation and creep is as follows (depending on the accepted method of calculation):

1. Janbu method + creep analysis:

S=30.82 cm+32.16 cm=62.98 cm.

2. Kay and Cavagnaro method + creep analysis:

S=64.21 cm +32.16 cm =96.37 cm.

3. Perloff method + creep analysis:

S=70.9 cm +32.16 cm =103.06 cm.

However, it is worth noting that the results of calculations carried out by the provided methods are highly dependent on which thickness of the soil under the foot is accepted as compressible, and which part of the base is accepted conditionally incompressible. And different methods give different recommendations on this matter. In the norms they said that if the compressible soils under the foundation bottom are underlain by hard clays, shale, rock or dense sands, then the compressible part may be presented as a layer of finite thickness H underlain by an incompressible base. However, there are no specific limits on the mechanical characteristics of such soils, which can be considered as stiff ones. Instead, in other part of the norms some minimum and maximum values are given for soils of different types and states. When converting the presented values from tsf to MPa, it can be seen that soils with a deformation modulus from 48 MPa to 96 MPa may be referred to the hard clays according to this table.

Another reference to the limitation of compressible thickness can be seen in the recommendation for calculating the immediate settlement for cohesionless soils. It is recommended that the thickness of the compressible layer be equal to the width of the foundation in case the calculation model corresponds to the conditions of plane strain and the half-width thickness for the case of an axisymmetric problem (which more closely corresponds to the conditions of the problem under consideration). However, the recommendation applies only to a single-layered massif of the non-cohesive soil, as it is not entirely clear in the case of a base that is inhomogeneous in depth.

On the basis of the compressive thickness of the soil, settlement values directly depend, but the regulatory document does not provide clear and universal recommendations on how to determine it. In domestic regulatory documents (for example, commonly used in Russian SP 22.13330.2011), clear recommendations are given for determining the compressible thickness for any case of bedding, including in the presence of weak soil layers or, conversely, hard or even rocky soil.

In order to compare the settlement obtained using these recommendations, calculations of the base settlement are performed by the method of layerwise summation. We present the course of the solution and the results obtained.

According to SP 22.13330.2011 "Soil bases of Buildings and Structures", the settlement of the foundation base s, cm, is calculated using the model in the form of a linear deformable half-space, by the method of layerwise summation by the following formula:

$$s = \beta \sum_{i=1}^{n} \frac{(\sigma_{zp,i} - \sigma_{z\gamma,i}) \cdot h_i}{E_i} + \beta \sum_{i=1}^{n} \frac{\sigma_{z\gamma,i} \cdot h_i}{E_{e,i}} \quad (7)$$

where β is the dimensionless coefficient, equal to 0.8; σ_{zp}^{i} is the average value of the vertical normal stress from the external load in the i-th layer of the soil along the vertical passing through the center of the foundation footing, kPa; h_i is the thickness of the i-th layer of soil, cm, accepted no more than 0.4 of the foundation width; E_i is the modulus of deformation of the i-th soil layer along the primary loading branch, kPa; $\sigma_{z\gamma}^{i}$ is the average value of the vertical stress in the i-th layer of the soil along the vertical, passing through the center of the foundation foot, from the weight of the soil excavated from the pit, kPa; $E_{e,i}$ is the modulus of deformation of the i-th soil layer along the secondary loading branch, kPa; *n* is the number of layers into which the compressible base thickness is divided.

The depth of the compressible stratum, according to the obtained diagrams, is H_c = 43.60 m. The settlement obtained by that method was 57.22 cm.

Further, we can calculate the settlement taking into account the scale-up factors recommended by SP 23.13330.2011 "Foundation of hydraulic structures". The increase of the deformation modules depending on the size of the foundation has already been carried out by the geological specialists. This factors grows up the modulus of deformation of soils nearly by 1.5-2 times. And the settlement was 29 cm only.

3 CREEP ANALYSIS BY NUMERICAL SIMULATION

The obtained analytical calculations are usually confirmed by numerical methods, for example, using programs that implement the finite element method (FEM).

It is possible to simulate the processes of creep at the base using either the direct specification of creep deformation, which is found analytically, or by using special soil models that take into account the development of this process.

3.1 Semi-numerical method

The creep deformation specified in the program can be found using the following relationship:

$$\varepsilon_{creep} = \sigma_{zp,m} \cdot m_{v2} \cdot ln\frac{t^1}{t_f}, \quad (8)$$

where $\sigma_{zp,m}$ – value of mean additional pressure in creepable soils, MPa;

m_{v2} – secondary consolidation factor for layer due to additional stresses in the soil, MPa^{-1}.

t^1 – operation time of the building, years;

t_f – the time corresponding to the degree of consolidation of 0.9.

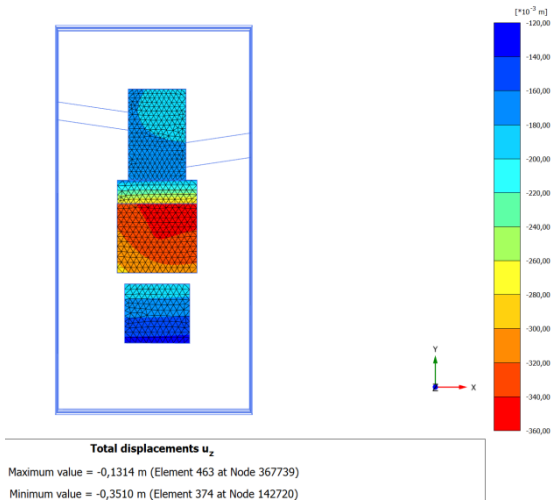

Figure 3. Isofields of the vertical displacements of the foundations after the end of the creep process obtained by FEM

3.2 Direct numerical method

The importance of predicting creep deformations for structures of increased responsibility is illustrated by the example of calculating a complex underground structure consisting of a reinforced concrete chamber and its subway transport tunnels. The calculation was made taking into account the staged construction of the structure, but the main task was to account for the long-term creep of solid and semi-solid soils, which are located at the base of the structure.

The use of a soil creep model is necessary to predict displacements and the relative difference in settlements between different parts of an underground structure over a long period of operation. If at the time of completion of the construction, the maximum settlements values of the chamber were 1.3-1.8 cm, then after 100 years of operation, these values increased to 6-7.5 cm. The obtained results show the quantitative importance of the importance of using complex soil models for calculations with direct determination of their parameters in the laboratory. The set of basic parameters of the model for a layer of clay soil subject to creep obtained during laboratory tests is given in Table 1.

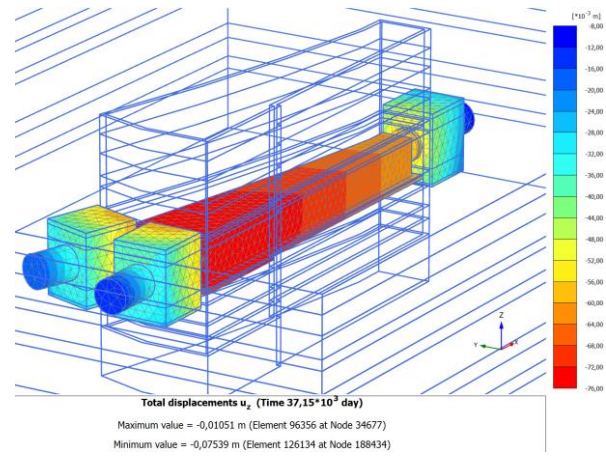

Figure 4. Isofields of vertical displacements of the exit chamber and surrounding structures at the time of passing 100 years after the completion of construction, mm

Table 1. Normative (1) and optimized (2) values of the SSC model parameters

	Modified coefficient of compressibility	Modified discharge factor	Modified creep index	Poisson number at unloading	Coefficient of earth pressure	The parameter of the slope of the critical state line	Angle of internal friction, °	Specific cohesion, кPa
	λ^*	κ^*	μ^*	ν_{ur}	K_0	M	φ	c
1	0,0174	0,00189	0,000687	0,383	0,587	2,04	36	5
2	0,0150	0,00189	0,000843	0,352	0,732	1,795	36	5

To perform the calculation of the soil base in time, taking into account the creeping process, the Soft Soil Creep (SSC) model was used, which is included in the standard set of PLAXIS software.

The optimization process of soils parameters in PLAXIS itself is the loading of the test curves obtained in the laboratory and the simulation of the same curves in the Soil Test subroutine. The subroutine finds differences in the law of behavior of a real loaded curve and a simulated one, and also proposes a new optimization curve that reflects a more close to reality behavior. It also leads to a new set of optimized model parameters. Table 1 at number 1 presents a set of initial basic laboratory parameters of the model, and under number 2 - their optimized values.

4 CONCLUSIONS

1. The results of numerous observations of the large area foundations settlements show significantly lower values than the predicted. Therefore, domestic standards has the methods for adjusting the calculations, which are absent in the foreign standard under consideration.
2. In the considered foreign norms, unlike domestic ones, there are no clear recommendations on the sequence of calculations performed and on the choice of a particular method from among the many proposed, which can lead to significant errors and discrepancies in the results depending on the level of geotechnical engineer.
3. Differences in the value of the calculated settlement obtained according to the Russian and American norms are also caused by different interpretations of the engineering geological surveys results in determining the deformation modulus.
4. The calculations performed show a significant settlement due to creep (more than 25% of the total), which should be taken into account when designing complicated structures with a long service life.
5. The usage of numerical methods for calculating the long-term deformation of the soil bases of complex underground structures is much simpler and clearer than analytical calculations, but it requires a set of adequate parameters, determined by direct laboratory methods.

5 REFERENCES

Shirinkulov, T. Sh. 1986. Creep and consolidation of soils. Tashkent: Fan.

Meschjan, S.R. 1992. Rheological processes in clay soils (taking into account special effects). Erevan: Ajrastan.

Liu Q. B., Xiang W., Su A. J., Wang J.E., Liu X., Wang S., Xia D. S. 2017. Experimental study of residual-state creep behavior of intact sliding-zone soil., *Yantu Lixue* **38, 5**, 1305-1313.

Buslov A.S., Bakholdin B. V., Stavnitser L. R. 2017. Soil creep equations based on the probabilistic rheological model., Soil Mech. and Found. Eng. **54**, 1, 1-6.