Proceedings of the XVII ECSMGE-2019
Geotechnical Engineering foundation of the future
ISBN 978-9935-9436-1-3

doi: 10.32075/17ECSMGE-2019-0939

XVII European Conference
ECSMGE 2019
Reykjavik
on Soil Mechanics
and Geotechnical Engineering

The impact of partial factors on the design of foundations for precast concrete structures

L'impact de facteurs partiels sur la conception de fondations pour structures en béton préfabriqué

K. C. Avellan, E. Belopotocanova
KAREG Consulting Engineers, Helsinki, Finland

ABSTRACT: Differential settlements of foundations caused by eccentric loads represent a significant percentage of settlement cases, and even minor ones can affect the integrity of buildings by causing damage to their architecture. Several Design methods are used in different European countries, and are cause for a wide disparity of results. The author proposes an example with a simply devised calculation method, that would potentially improve the interaction between Geotechnical and Structural engineers, with a comprehensive work tool common to both.

RÉSUMÉ: Les tassements différentiels des fondations causés par des charges excentriques représentent un pourcentage significatif des cas, et même les plus mineurs peuvent affecter l'intégrité des bâtiments en causant des dommages à leur architecture. Plusieurs méthodes de conception sont utilisées dans différents pays européens, et sont à l'origine d'une grande disparité de résultats. L'auteur propose un exemple avec une méthode de calcul simplement conçue, qui pourrait améliorer l'interaction entre ingénieurs en Géotechnique et en Structure, avec un outil de travail complet, commun aux deux.

Keywords: Eccentric settlements, pad foundations, partial and total safety factors

1 INTRODUCTION

The practical design of foundations is either a joint venture work between structural and geotechnical engineers, or one realized by a single engineer knowledgeable in both fields. Usually, the actions of the superstructure are determined by the structural engineer and the ones from the substructure, defined by the geotechnical engineer. The development of Eurocodes is an ongoing process, especially in Eurocode 7 which contains different approaches and national annexes. These do not contribute positively to the design interaction of structural and geotechnical engineers, but rather hinder the process.

There are only a few examples and guidelines in Eurocode 7: Geotechnical Design Worked examples, that can be used specifically for settlement calculations and furthermore, no relevant information is to be found for settlement calculations of an eccentric pad foundation, which actually represents a significant percentage of building foundations.

An example of this would be a supermarket, a single story building with two different spans, simply supported pre-fabricated, prestressed beams, and set on precast columns. The substructure consisting of pad foundations lying over frictional soil, rock or founded on piles. For the purpose of this article it is assumed that the ground consist of frictional soil and rock.

Uneven settlement can cause unacceptable problems which affect directly the integrity of buildings. These can consist in floor inclinations, various surface cracks, window and door frames misalignments, etc., problems that occur long before any kind of ground failure actually happens, but whose impact is significant and potentially costly. The problems can also extend beyond the buildings themselves, and affect drainpipes and sewage pipe connections as well as pipe slopes. Therefore current practice for geotechnical foundation design of buildings should be principally based on limiting settlements using Service Limit State (SLS) and that ground resistance based on these settlements also fulfills ground pressure requirements in Ultimate Limit State (ULS).

This can be clarified knowing that the in Ultimate Limit State (ULS), calculated bearing capacity is mostly depending on passive pressure distribution (passive pressure coefficient), and at failure state the passive pressure has attained its greatest value and the settlement at failure is then important (Figure 1).

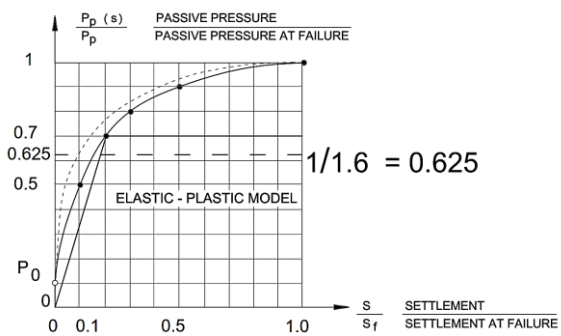

Figure 1. Elastic-Plastic model according to the author and based on the investigations of Horn (1970)

In the following text, the design contact pressure q_d is predicted as soil pressure at failure q_u divided by 1.6 (Figures 1 and 2). The eccentricity is predicted in SLS, and the point or line in ULS, is the same as in SLS. The settlement predictions are made by assuming $q_k = q_d$ (Avellan 1992, 2011, 2015). The method is illustrated by a numerical example. SPT test is used for predicting the friction angle and q_u (the soil pressure at failure, ultimate value of q) is calculated by Brinch Hansen formula (1961). The settlement calculations according to Schultze-Sherif (1973) and Burland-Burbidge (1985) have been verified by Kany's method (1974). The deformation modulus have been predicted by the method of Papadopoulos-Anagnostopoulos (1987).

2 CONTACT PRESSURE DISTRIBUTION DUE TO OVERALL SAFETY FACTOR

If the foundation is rigid, then the contact pressure distribution depends on the Overall Safety Factor (OSF) against failure state, and on the ground type (Figure 2).

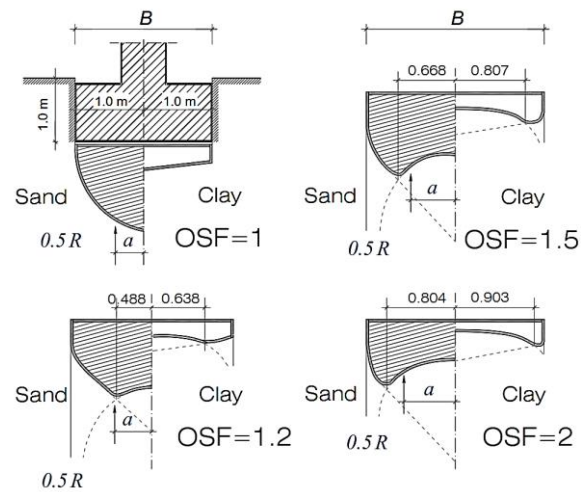

Figure 2. Distribution of ground pressure under rigid foundation due to Overall Safety Factor (OSF) and ground type (Schultze 1961, half of resultant R and distance a, added by the author)

Assuming that the width of the foundation is B, the OSF is variable, and the resultant of the soil distribution is R, then the bending moment of ground pressure is as an action M depending on the distance *a* between half of the resistance R

and the center line of the supporting structure (Figure 2).

The bending moment is:

$$M = 0.5\, R \cdot a \qquad (1)$$

and is depending on OSF and soil type.

This also means that all soil-structure interaction problems of foundations on soil are non-linear action-resistance interactions, but can be solved, in the case of frictional soil, by simple methods, assuming that OSF is between 1.5…2.0 (Figure 1 and 2).

2.1 Soil investigations

In most cases concerning supermarket type of buildings, those belonging to Consequence Class two (CC2), soil can be determined by penetration tests and disturbed soil samples. The penetration tests can be either static such as cone penetration test (CPT), Swedish weight sounding (SWST), and dynamic such as standard penetration test (SPT). The most commonly used test is the SPT of which there is several formulas for bearing capacity calculations and for settlement predictions.

3 PARTIAL FACTORS AND TOTAL SAFETY FACTORS OF ACTIONS

3.1 Total safety factor of actions

According to EC 0, the effects of actions Ek in SLS and Ed in ULS are influenced by partial factors.

Partial Factors γ used in this paper are in SLS/ULS:

γ_g is $1/\gamma_{gd}$ is 1.35 for permanent action
γ_q is $1/\gamma_{qd}$ is 1.5 for variable action
ψ_o is 0.7 for second variable action

Combination of actions in SLS, γ_k, and γ_d in SLS or ULS as above,

$$\gamma Gk + \gamma Qk + 0.7\,\gamma W \qquad (2)$$

or,

$$\gamma Gk + 0.7\,\gamma Qk + \gamma W \qquad (3)$$

where:

G_k is the combined effect of characteristic permanent action,
Q_k is the leading characteristic variable action,
W is the wind load, variable action

In the case of a supermarket, the effect on design for actions on the exterior column in line A1 (Figure 3 and 4) are in SLS as follows:

M_k is the characteristic bending moment,
H_1 is the opposite reaction due to the flexural rigidity of the columns,
I is the moment of inertia,
N is SPT,
ϕ is frictional angle of soil,
γ_s is unit weight of soil 16 kN/m^2,
γ_s' is effective unit weight of soil 12 kN/m^2

The total safety factor of actions $\gamma_{t,a}$ as ratio; sum of actions in ULS divided by the sum of actions in SLS is a simple and useful tool between those limit states, it is:

$$\gamma t,a = \sum Fd \;/\; \sum Fk \qquad (4)$$

Assuming following values of the superstructure supported by columns we get as $\gamma_{t,a}$

$q_k/g_k = 0.5$, then $\gamma_{t,a} = 1.40$
$q_k/g_k = 1.0$, then $\gamma_{t,a} = 1.43$
$q_k/g_k = 1.5$, then $\gamma_{t,a} = 1.44$
$q_k/g_k = 2.0$, then $\gamma_{t,a} = 1.45$

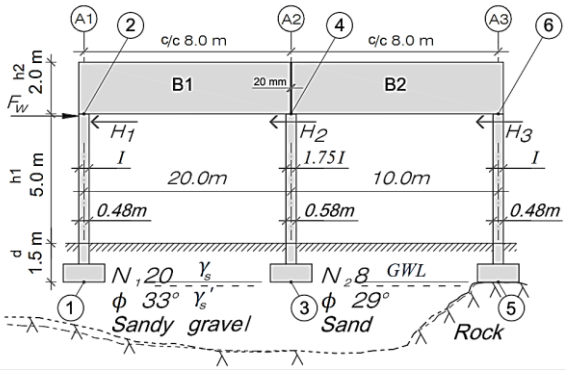

Figure 3. The superstructure and substructure of supermarket

3.2 Numerical example: Supermarket with parking roofs

Loads on roof (own weight of beams included) consist of permanent load g_k = 5.0 kN/m², variable load q_k on beam B1 = 5.0 kN/m² ,B2 = 10.0 kN/m², w (wind) having both pressure and suction together as 1.0 kN/m² (Figures 3 and 4).

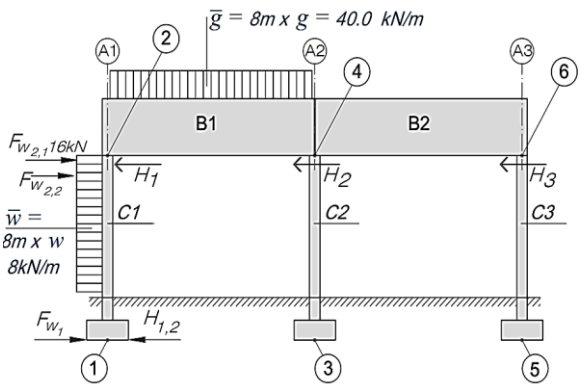

Figure 4. Wind and roof, uniformly distributed loads as line loads

Assuming the column connection to foundation is rigid we get from basic statics (Figure 5), we get:

$$F_{W2,2} = \frac{wh}{8}\left(8 - \frac{6h}{L} + \frac{h^3}{L^3}\right) \qquad (5)$$

$$F_{W1} = \frac{wh^2}{8L}\left(6 - \frac{h^2}{L^2}\right) \qquad (6)$$

where L equals $h + d$.

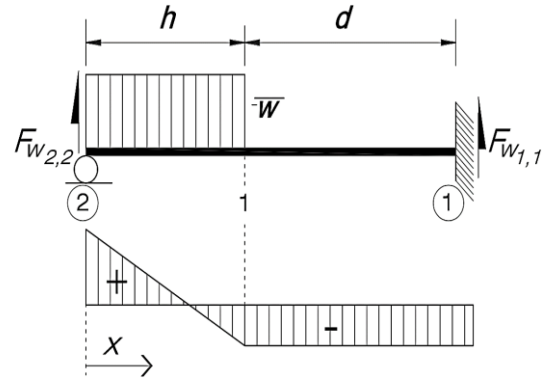

Figure 5. Column and beam. Left end simply supported, right end fixed (Byggtabeller)

The heights of the columns are the same and the equilibrium of horizontal forces for the corner 2 is:

$$F_{W2,1} = H2,1 + 1.75\,H2,1 + H2,1 \qquad (7)$$

$$F_{W2,2} = H2,2 + 1.75\,H2,2 + H2,2 \qquad (8)$$

Using these numerical values we get:

$H_{2,1} \cong$ 4.26 kN
$H_{2,2} \cong$ 12.23 kN
$H_{1,2} \cong$ 27.8 kN

The moments are:

$$Mk1,1 \cong H2,1 \cdot (h + d) \qquad (9)$$

$$Mk1,2 \cong -H2,2 \cdot (h + d) + w \cdot h(h/2 + d) \qquad (10)$$

M_{k1} is $\cong M_{k1,1} + M_{k1,2} \cong M_{k1} \cong$ 108.2 kNm.

Following numerical calculations, the foundations own weight that of the columns and the soil on the foundations are ignored. The ground thickness z of the compressible material under the foundation, divided by the breath of the foundation, is different for each foundation.

3.2.1 Column C1

E_k is defined as G_k, $M_{k1} + \Delta M_k$ (installation eccentricity of the column as 1:150),

G_k = 400 kN,

M_{k1}=108.2 kNm + 17.3 kNm = 125.5 kNm,

foundation B · L = 1.15 · 1.80 m, $\frac{Z}{B}$ = 2,

e_k max = M_{k1} / G_k = 0.31 m.

e_k max/ L = 0.172 > 0.166 which means G_k is outside the core of section and then tension pressure.

From basic statics for non-tension resistant material we get $q_{k,e}$ (the maximum elastic compression pressure):

$$2G/(3 \cdot (L/2 - ek) \cdot B) = qk,e \qquad (11)$$

$q_{k,e}$ = 392 kN/m²,

effective length $L_{eff.}$ = $(\frac{L}{2} - e_k)$ 2 = 1.18 m

SPT N20, ϕ 33°, $\frac{Z}{B}$ = 2

By Brinch Hansen: q_u = 1392 kN/m²

$q_d = q_k = q_u / 1.6$ = 870 kN/m²

By Schultze-Sherif: S = 14.5 mm

By Burland&Burbidge: S = 15.5, S~15 mm

E_d, assuming e_k max, $\gamma_{t,a}$ (V_{kg} 2.4 + V_{kq} 2.4) equals:

1.43(400 kN + 400 kN) = 1140 kN = E_d,

$R_d \geq$ 1.15 m · 1.18 m · 870 kN/m² = 1180 kN > E_d , $E_d < R_d$

It is possible to back-calculate E - the modulus of soil deformation using the theory of elasticity, based on the methods by Janbu (1956) and Kany (1974). The value of E equals 33,700 kN/m².

The rotational angle θ can be predicted by the method of Matl (DIN 4019 B12). We then obtain θ ~ 0.4°…0.5° applying Leff.

3.2.2 Column C2

E_k is V_k 2-4 = 860 kN, V_k 4.6 = 600 kN

q_k/g_k = 1, $\gamma_{t,a}$ 1.43 ; q_k / g_k = 2, $\gamma_{t,a}$ 1.45

V_d 2-4 = 1440 kN, V_d 4.6 = 855 kN

E_d = 1995 kN

Foundation 2.15 m x 2.15 m

SPT N8, ϕ 29°, $\frac{Z}{B}$ = 3

q_u = 805.6 kN/m² (B. H.)

$q_d = q_k$ = 503.5 kN/m²

R_d = 2.15 · 2.15 · 503.5 kN/m² = 2327.4 kN > E_d = 1995 kN

S.-S. 38.7 mm

Because of the small value of N, we have to verify the settlement as follows:

E ~ (7.5 + 0.8N) MPa (P.-A.), E ~ 13,900 kN/m²

By Kany:

S_d = 58.4 mm ~ 60 mm

$S_k \leq S_d / \gamma_{t,a}$ = 60 mm/ 1.43 = 42mm

3.3 The joint between beams B1 and B2

The movement joint between beams B1 and B2 is 20mm. The angular distorsions β. The specifications are as follows:

Beam B2 is β 6-4 ~ 60/10,000 = 0.006,

Beam B1 is β 2-4 ~ 15/20,000 is ignored,

Horizontal imagined, ΔH_d (ULS),

The movement on the top of beam B2 is about

ΔH_d = 0.006 · 2000 = 12 mm

ΔH_k is real movement in SLS, resulting in:

$\Delta H_d / \gamma_{t,a}$ = 8.3 mm = ΔH_k

3.4 Foundations of column C1 and horizontal force

Actions are defined as follows:

$V_{k,,g}$ = 400 kN , E_d = 1.35 $V_{k,,g}$ = 540 kN

$V_{k,,g}$ = 0

M_k = 125.5 kNm

e_k = 0.313 m

Horizontal force $H_{1,2k}$ = 25.9 kN
The foundation is 1.15 m · 1.18 m
The effective foundation is B x Leff. =
= 1.15 m · 1.18 m
The horizontal force added to formula by B. H.
$q_u \cong 780$ kN/m²
$q_d \cong q_k \cong 488$ kN/m²
$R_d \cong 488$ kN/m² ·1.15 m · 1.18 m $\cong$ 662 kN
R_d (662 kN) > E_d (540 kN)

4 CONCLUSIONS

The foundation design of foundations on frictional soil for CC2-class of buildings is described for the cooperation between structural and geotechnical engineers. Understanding and designing foundations and predicting settlements requires the traditional skills of engineers. Simple calculations as these prove to be instructive and beneficial. The paper underlines why the author already chose in 1992, his partial safety factor of 1.6 based on a study of Schultze (1961) which shows nearly uniform ground distribution with safety factor 1.5, simultaneously based on passive pressure-soil deformation test by Horn (1970) that showed near linearity with partial factor of 1.6.

The author uses his partial safety factor for resistance to be 1.6 in the beginning of the design process. The author has used for actions a total safety factor $\gamma_{t,a}$ depending on the permanent and variable vertical loads. Because of linearity (or near linearity) the SLS values can simply be obtained by dividing the ULS values with $\gamma_{t,a}$ which is between 1.40…1.45 for supermarket building types.

The settlements have been calculated by using $q_k = q_d$ and the settlement in SLS can be calculated dividing S_d by $\gamma_{t,a}$.

The minimum safety factor of resistance is 1.6 and the total safety factor of actions is between 1.40…1.45. This means that the real safety factor for ground bearing capacity is between 2.24…2.32.

5 REFERENCES

Avellan, K. 1994. *Ultimate Limit State Design of Strip Foundation.* In Proc. XIII ICSMFE. Thirtheenth International Conference on Soil Mechanics and Foundation Engineering, Volume 2. New Delhi: Oxford&IBH Publishing :449-452.

Avellan, K. 2011. *Limit State Design for strengthening Foundations of historic buildings using pretested drilled spiral piles with special reference to St.John's Church in Tartu.* Doctoral thesis. University of Oulu, Faculty of Technology, Department of process and environmental Engineering.

Avellan, K. 2015. *Simple calculation method for soil -foundation -pile -slab interaction*. Edinburgh. Proc. of 16th ECSMGE.

Byggtabeller. 1987. ISBN 91-38-90245-1. Libertryck. Stockholm (handbook in Swedish)

Brinch Hansen J. 1961. *A general formula for bearing capacity*. Copenhagen. Akademiet for de tekniske videnskaber Geoteknisk institute. Bulletin no.11:38-46.

Burland JB & Burbidge MC. 1985. *Settlements* of *foundations on sands and gravel*. Proc., Part 1, 78. UK, Institution of Civil Engineers:1325-1381.

Byggtabeller. 1987. ISBN 91-38-90245-1. Libertryck. Stockholm (handbook in Swedish)

DIN 4019. Blatt 2.

Eurocode: Basis of structural design. EN 1990.

Eurocode 2: Design of concrete structures.
EN 1992

Eurocode 7: Geotechnical design (EN 1997)

Janbu, N., Bjerrum, L. Kjaernsli, B.1956. *Veiledning ved løsning av Fundamente-ringsoppgaver.* Norges Geotekniske Institut. Publikasjon Nr. 16. Oslo.

Kany, M. 1974. *Berechnung von Flächengrundungen. 2. Aufl.*. Verlag von Wilhelm Ernst & Sohn. Germany.

Papadopoulos, B.P., Anagnostopoulos, A.G. 1987. *Groundwater effects on settlement estimations*. Proc. 9th European Conference on Soil Mechanics and Foundation Engineering,

Dublin, 31 August-4 Sepetember 1987, Vol.2, 725-729.

Peck R.B., Hanson W.E., Thornburn H.T. 1974.*Foundation Engineering*. John Willy & Sons. New York.

Schultze E. & Sherif G. 1973. *Prediction of settlements from evaluated settlement observations for sand*. Moscow. Proc. of 8th ICSMFE:225-230.

Schultze, E.1981. *Distribution of stress beneath a ridgid foundation*. Proc. 5th Internatioanl Conference on Soil Mechanics. Paris:807-813.