Proceedings of the XVII ECSMGE-2019
Geotechnical Engineering foundation of the future
ISBN 978-9935-9436-1-3

doi: 10.32075/17ECSMGE-2019-0812

XVII European Conference
ECSMGE 2019
Reykjavik
on Soil Mechanics
and Geotechnical Engineering

Reducing the vibration level of the footings for equipment by viscoelastic connection

Réduction de la vibration des fondations par le biais de la création d'une liaison viscoélastique

Y. A. Kirichek
Pridniprovska State Academy of Civil Engineering and Architecture, Dnipro, Ukraine

ABSTRACT: In this paper connected dynamic footings problem is considered, for redusing vibrations. A closed solution is obtained for differential equations of forced horizontal oscillations for coupled foundations of various sizes. A thin reinforced concrete slab on the ground surface was considered as a connection between the foundations. The influence of the characteristics of such connection between the foundations on the intensity of oscillations of the foundations under the influence of periodic dynamic loads is analyzed. Theoretically, the possibility of a multiple decrease in the intensity of oscillations of foundations has been confirmed for machines with periodic loads by combining them with connection in the form of a thin slab on the soil surface.

RÉSUMÉ: Afin de réduire le niveau des vibrations des fondations une étude dynamique des fondations assemblées a été effectuée. On a obtenu une solution fermée des équations différentielles des oscillations horizontales forcées des fondations assemblées de différentes tailles. La liaison viscoélastique a été représentée par une dalle de faible épaisseur en béton armé à la surface du sol. L'influence des caractéristiques de cette liaison sur l'intensité des vibrations a été analysée à l'aide d'application d'une charge dynamique périodique. Théoriquement la possibilité d'une multiple réduction de l'intensité des vibrations des fondations pour les machines produisant les charges périodiques a été confirmée en assemblant ces fondations par des liens sous la forme d'une dalle de faible épaisseur à la surface du sol.

Keywords: Soil dynamics, connected footings, vibration, foundation for machine.

1 CONSTRUCTIVE METHOD OF REDUCING THE FOUNDATION VIBRATION

Dynamics of foundations deals with engineering properties and behavior of machine foundation under harmonic load imposed by unbalanced rotation machineries. The resulting vibrations should not exceed their critical values and correct characteristics of the foundation have to be determined.

It is well known that the dynamic behavior of foundation depend upon characteristic such as mass, shape and dimensions of footings, stiffness and damping of the strata of soil on which are impossed. Tipically low level of vibration is ensured by specified characteristics

of the foundations for machines with dynamic loads. The frequency of forced vibrations of foundations must differ significantly from the natural frequency of the foundations. When in practice this fails, the reducing vibration levels is considered. In this case, the footing mass or soil stiffness is usually significantly increased, depending on whether the natural frequency of oscillation is lowered or increased. This is not easy to do in practice. Therefore, various constructive methods are used to reduce the vibration of the machine (Kirichek 2000). Such a method of reducing the vibration level is proposed by means of joiningn footings together by connection with given stiffnesses and dampings shown in Figure 1. The connections between footings (1) for machines (2) can consist of horizontal plates located on a ground (3), in the ground, above the ground-level or can consist of joint bars.

2 ANALISIS OF CONNECTED FOOTINGS FOR MASHINERY AND VIBRATING EQUIPMENT

In this paper connected footings problem of dynamics is considered. As shown in Figure 2 two footings of different masses are connected with a thin reinforced concrete slab on the ground surface. A mathematical method was developed to find the necessary stiffness and damping of connection between the footings. A set of mathematical equations was formulated for the displacement and the solutions were found to estimate the amplitudes of forced displacements and natural frequencies of connected footings with different dimensions. Usually the dynamic analysis considers three modes of vibration: vertical, horizontal and rocking under cyclic loading. The horizontal and rocking oscillations are considered here, since they are usually much more pronaunced than the vertical ones.

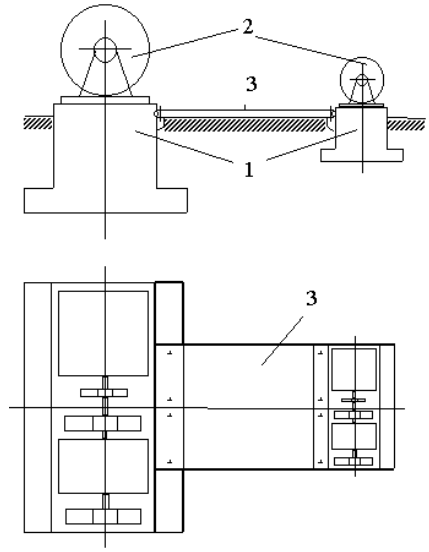

Figure 1. Connected footings

2.1 Mathematical model of connected footings

In mathematical calculations for a footing widely applicable system is considered that consists of a single masse, supported by linear spring and viscous damper [Barcan 1962]. We are considering the system of two joined masses by viscoelastic connection, supported by springs and dashpots. Approximately, mathematical model for the computing displacement of two connected foundation under dynamic loads can represent footings as completely rigid body but the soil and connection act as a viscoelastic material.

When oscillation of the connected footings are outside the resonant zones, we can ignore the damping in order to simplify the calculations without reducing the accuracy of the calculations. Approximate mathematical model for computing the displacements and natural frequencies of foundations for dynamic loads was developed by using mass-spring system [Kirichek 1986]. This system consists of two diferent masses, supported by a springs. The masses are joined by elastic connection.

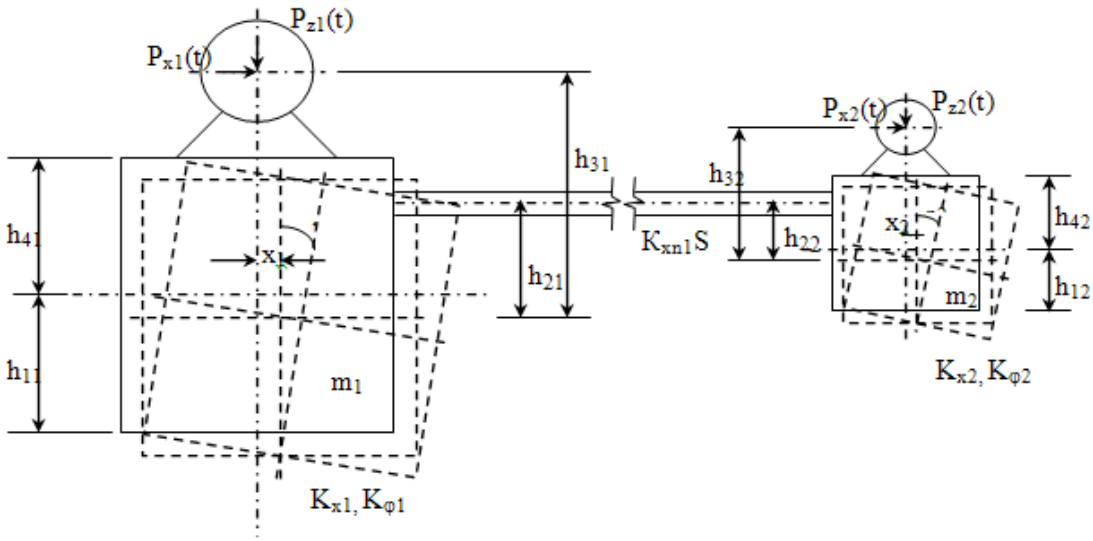

Figure 2. Scheme of connected footings

2.2 Basis equations

The responses of system « footing-connection-footing » are investigated in this paper. According to Newton`s second law the equations of horizontal and rotation displacements of two connected massive footings are:

$$m_1\ddot{x}_1 + \left(K_x^p + S + K_{x1}\right)x_1 - Sx_2 + \\ +\left[(-1)^k K_x^p h_2 + (-1)^k S h_2 - K_{x1}h_1\right]\varphi_1 - \\ -(-1)^k S h_2 \varphi_2 = P_1 \sin(\omega_1 t + \beta_1);$$

$$\theta_1\varphi_1 + (K_x^P h_2^2 + S h_2^2 + K_{\varphi 1} + K_{x1}h_1^2 - \\ -Q_1 h_1)\varphi_1 - S h_2^2 \varphi_2 + [(-1)^k K_x^P h_2^2 + \\ +(-1)^k S h_2 - K_{x1}h_1]x_1 - (-1)^k S h_2 x_2 = \\ = P_1 h_{41} \sin(\omega_1 t + \beta_1);$$

$$m_2\ddot{x}_2 + \left(K_x^p + S + K_{x2}\right)x_2 - Sx_1 + \\ +[(-1^k)K_x^p h_2 + (-1)^k S h_2 - K_{x2}h_1]\varphi_2 - \\ -(-1)^k S h_2 \varphi_1 = P_2 \sin(\omega_2 t + \beta_2); \qquad (1)$$

$$\theta_2\ddot{\varphi}_2 + (K_x^P h_2^2 + S h_2^2 + K_\varphi + K_{x1}h_1^2 - \\ -Q_2 h_1)\varphi_2 - S h_2^2 \varphi_1 + [(-1)^k K_x^P h_2^2 + \\ +(-1)^k S h_2 - K_{x2}h_1]x_2 - (-1)^k S h_2 x_1 = \\ = P_2 h_{42} \sin(\omega_2 t + \beta_2)$$

where x_i, φ_i – accordingly horisontal displacements and angles of rotation of the footings;

m_i, Q_i, θ_i, – accordingly masses, weights and moments of inertia of footings including the masses of the machines;
$K_{xi}, K_{\varphi i}$ - spring constants of the soil in shear and in rotation of the footings;
K_x^p - spring constants in shear of the soil under the joining plate;
S - spring constants of the joining plate;
$h_{1i}, h_{2i}, h_{3i}, h_{4i}$- accordingly foundation level distance, the median plane of the joining plate distance, the line of horizontal force distance and the top of the footing distance from center of inertia of the footing including the machine;
i – footings number;
$k = 1$ if the center of inertia of footing including machine is above the median plane of the joining plate;

$k = 2$ if the median plane of the joining plate is above the center of inertia of footing including machine.

Closed-form solution is performed for different masses of footings $m_1 > m_2$. In the case when horisontal sinusoidal load is impossed on the smaller footing the horizontal vibration amplitude A_1, A_2 of the footings are:

$$A_1 = A_{12}^P + A_{12}^M + Y_{12}^P h_{41} + Y_{12}^M h_{41}; \quad (2)$$

$$A_2 = A_{22}^P + A_{22}^M + Y_{22}^P h_{42} + Y_{22}^M h_{42}:$$

$$A_{12}^P = \frac{P}{G_1 + \alpha_{21}^P (B_1 - \frac{C_2}{h_{21}})}; \quad A_{22}^P = A_{12}^P \alpha_{21}^P;$$

$$Y_{12}^P = E_1 A_{12}^P; \quad Y_{22}^P = \frac{Y_{12}^P}{Sh_{21}} (B_1 - S\alpha_{21}^P + E_1 C_1);$$

$$\alpha_{21}^P = \frac{F_1}{\frac{D_2}{h_{21}} - C_2}; \quad \alpha_{21}^M = \frac{G_1}{\frac{C_2}{h_{21}} - B_2};$$

$$A_{12}^M = \frac{Ph_{14}}{F_1 + \alpha_{22}^M (C_2 - \frac{D_2}{h_{21}})}; \quad A_{22}^M = A_{12}^M \alpha_{21}^M; \quad Y_{12}^M = E_1 A_{12}^M; \; Y_{22}^M = \frac{Y_{12}^M}{Sh_{21}} (B_1 - S\alpha_{21}^M + E_1 C_1); \; G_1 = \frac{C_2 B_1}{Sh_{21}} - S + E_1 (\frac{C_1 C_2}{Sh_{21}} - Sh_{22}); \quad (3)$$

$$F_1 = \frac{B_1 D_2}{Sh_{21}} - Sh_{22} + E_1 (\frac{D_2 C_1}{Sh_{21}} - Sh_{22}^2);$$

$$E_1 = \frac{C_1 - B_1 h_{21}}{C_1 h_{21} - D_1}; \; B_1 = K_x^P + S + K_{x1} - m_1 \omega^2;$$

$$C_1 = K_x^P h_{21} + Sh_{21} - K_{x1} h_{11};$$

$$D_1 = K_x^P h_{21}^2 + Sh_{21}^2 + K_{\varphi 1} + K_{x1} h_{11}^2 - \theta_1 \omega^2;$$

$$B_2 = K_x^P + S + K_{x2} - m_2 \omega^2;$$

$$C_2 = K_x^P h_{22} + Sh_{22} - K_{x2} h_{12}; \quad D_2 = K_x^P h_{22}^2 + Sh_{22}^2 + K_{\varphi 2} + K_{x2} h_{12}^2 - \theta_2 \omega^2.$$

When horisontal sinusoidal load is impossed on the bigger footing the horisontal vibration amplitude A_1, A_2 of the footings are:

$$A_{12}^P = \frac{P_{x1}}{\left(B_1 - \frac{S^2 h_{21}}{C_2}\right) - \frac{E_2}{h_{22}} + \alpha_{21}^P * [\frac{E_2 C_2}{Sh_{22}\left(h_{22} - \frac{D_2}{C_2}\right)} - S\left(1 - \frac{h_{21} B_2}{C_2}\right)]};$$

$$A_{22} = \alpha_{21}^P A_{12}^P; \; Y_{12}^P = \frac{A_{12}^P}{h_{22}} [\frac{G_1 \alpha_{21}^P}{S\left(h_{22} - \frac{D_2}{C_2}\right)} - 1]; \; Y_{22}^P = \frac{A_{12}^P}{C_2} (\frac{G_1 \alpha_{21}^P}{h_{22} - \frac{D_2}{C_2}} - B_2 \alpha_{21}); \quad \alpha_{21}^P = \frac{F_2 + S^2 h_{21}^2 / C_2 - C_1}{\frac{E_2 G_2}{Sh_{22}\left(h_{22} - D_2/C_2\right)} - Sh_{21}(1 - \frac{h_{21} B_2}{C_2})}; \quad (4)$$

$$\alpha_{21}^M = \frac{\frac{S^2 h_{21}^2}{C_2} + \frac{E_2}{h_{22}} - B_1}{\frac{E_2 G_2}{Sh_{22}(h_{22} - D_2/C_2)} - (S - \frac{Sh_{21} B_2}{C_2})}; \quad A_{12}^M = \frac{Ph_{24}}{C_1 - \frac{S^2 h_{21}^2}{C_2} - - F_2 + \alpha_{21}^M [\frac{F_2 G_2}{S(h_{22} - D_2/C_2)} - - Sh_{21}\left(1 - \frac{h_{21} B_2}{C_2}\right)]};$$

$$A_{22}^M = \alpha_{21}^M A_{12}^M; \; Y_{12}^M = \frac{A_{12}^M}{h_{22}} (\frac{G_2 \alpha_{21}^M}{S\left(h_{22} - \frac{D_2}{C_2}\right)} - 1);$$

$$Y_{22}^M = \frac{A_{12}^M}{C_2} (\frac{G_1 \alpha_{21}^M}{h_{22} - \frac{D_2}{C_2}} - B_2 \alpha_{21}^M);$$

$$G_2 = C_2 - \frac{D_2 B_2}{C_2}; \; F_2 = \frac{D_1}{h_{22}} - \frac{S^2 h_{21}}{C_2};$$

$$E_2 = C_2 - \frac{S^2 h_{21} h_{22}}{C_2}.$$

In order to determine the responses of the connected footings vibrations the soil elastic properties need to be known. In conformity with modes of vibration spring constants for sliding and rocking vibration are K_x, K_φ accordingly. In Civil Engineering Standard Footings under Machines with Dynamical Loads 2.02.05-87 (SU) such lumped parameter vibrating systems consist of a mass, supported by a linear spring and a linear damper. The standard recommends to measure the main spring characteristic of dynamically loaded soils by tests. In case of lack of test measures the soil properties are estimated using empirical correlations for the coefficient of elastic uniform compression C_z (5) and dumping ratio ξ_z (6) for a foundation as:

$$C_z = b_0 (1 + E \sqrt{\frac{A_{10}}{A}}) \; . \quad (5)$$

wher E - modulus of elasticity,

A – area of the foundation base.

$b_0 = 1 \; [m^{-1}]$ for sand,

$b_0 = 1.2$ for silts, silty clay,

$b_0 = 1.5$ for clay and gravel.

$C_x = 0.7 C_z, \quad C_\varphi = 2 C_z.$

For sliding and rocking modes of vibration the spring constants are:

$K_x = C_x * A;$

$K_\varphi = C_\varphi * A.$

For periodic vibration damping ratio is equal:

$$\xi_z = \frac{2}{\sqrt{p}} \quad , \qquad (6)$$

for no periodic vibration:

$$\xi_z = 6\sqrt{\frac{E}{c_z p}} \, , \qquad (7)$$

where p – allowable bearing capacity of the foundation (pressure per unit area [KPa]). For sliding, rocking and torsion modes of vibration $\nu_x = 0.6\nu_z$, $\nu_\varphi = 0.5\nu_z$, $\nu_\psi = 0.3\nu_z$.

2.3 Computing result

According to the obtained dependences presented by Equations 3 and 4, the dynamic calculation of two footings, connected by a thin concrete slab located on the ground surface shown in Figure 3, was performed. Figures 4 and 5 shows changes in the amplitudes of forced vibrations from the characteristics of the connected plate at a fixed frequency of dynamic load. Here, the active foundation is the one to which the horizontal dynamic load is applied. The passive foundation is not loaded and oscillates under the influence of active foundation. With an increase in the length of the slab acting as a bond between the foundations, their spring constant of the base increases and the stiffness of the bond decreases. With increasing plate thickness, the bond stiffness increases.

The dependences of the amplitudes of forced oscillations of the foundations on the length and thickness of the slab show that these characteristics are influential, and by selecting them correctly fairly low level of vibration of both foundations can be achieved. The level of vibration of connected foundation can be much lower than the one of the single foundation of similar dimensions.

Comparison of the calculated amplitude-frequency characteristics of the connected foundations and the single foundation, the dimensions of which correspond to the size of the larger foundation was performed. It shows that in the frequency far away from the resonance, the amplitude of oscillations of the connected foundations may be almost an order lower than the amplitude of oscillations of the single foundations.

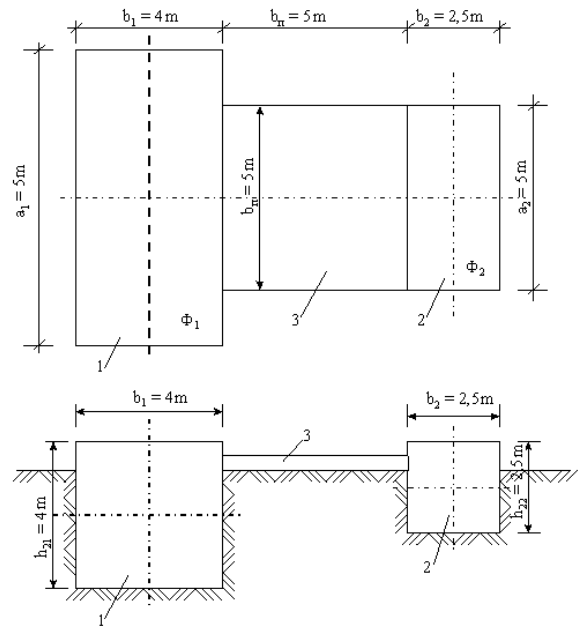

Figure 3. Connected footings

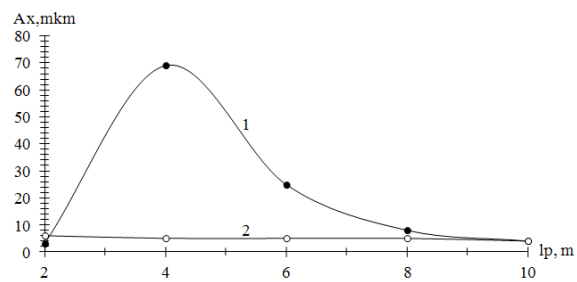

Figure 4. The dependences of the amplitudes of forced oscillations of the foundations on the length of the plate

As shown in Figures 6 and 7 the general nature of the dependence of vibration parameters on the characteristics of the connection between the foundations is also preserved for the case when the load is applied

to a smaller foundation, and the larger one acts as a passive one.

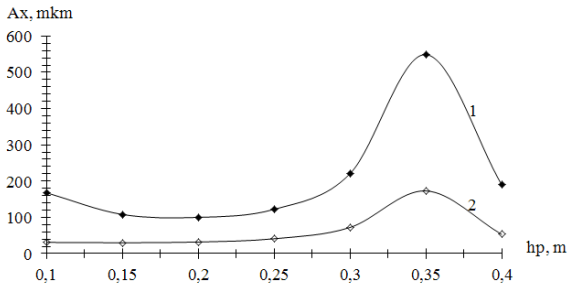

Figure 5. The dependences of the amplitudes of forced oscillations of the foundations on the thickness of the plate

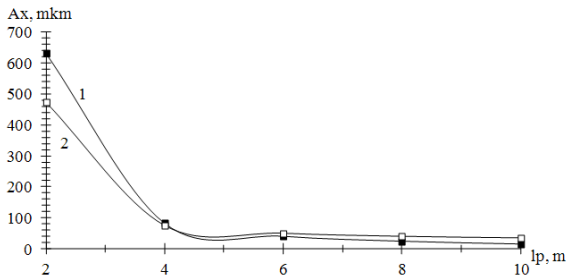

Figure 6. The dependences of the amplitudes of forced oscillations of the foundations on the length of the plate

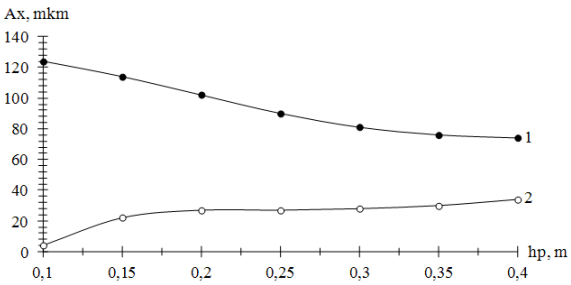

Figure 7. The dependences of the amplitudes of forced oscillations of the foundations on the thickness of the plate

The developed methods for calculating the connected foundations of various masses and the analysis of the effect of connection indicate that connection can be used as an effective and economical tool for reducing the vibrations of foundations for machines with dynamic loads.

Experimental studies also confirm that the connection between the foundations can be used as an effective means of reducing the vibrations of foundations for machines with dynamic loads.

Block-type footings for machines usually have a large masses and low natural frequencies. The connection of such footings by elastic-viscous connections leads to an increase in the natural frequency of the "foundation-connection-foundation" system. As a result, the amplitude of the oscillation of the foundations for machines with a dynamic load frequency of 6-20 Hz decreases by 5-10 times or more. This occurs as a result of the removal of the natural frequency from the forced frequency of oscillation.

3 CONCLUSIONS

The method of calculating the amplitude of forced vibrations of connected massive footings for machines with periodic loads has been developed. The analysis of the effect of connection characteristics on the oscillations of the foundations has been performed. The possibility of a significant reduction in the vibrations of low-frequency machines by the joining of the footings with viscous-elastic connection has been established.

4 REFERENCES

Kirichek Y, Bolshakov V. About oscillations of deepened combined massive and plate bodies on visco-elastic basement, *Proceedings for 4-th Euromech Solid Mechanics Conference in Metz* (2000), 632-640.

Barcan D.D. 1962. Dynamics of bases and foundations. New Jork. Mc.Graw-Hill Book Company.

Kiricek Y. Interakcija vise dinamicki opterecenih temelja i tla. 1986. *Zbornik radova "IV Kongres saveza drustva za seizmicko Gradevinarstvo Jugoslavije".* K.1, 125 -130. Zagreb.